Wireless Presenter User Manual

N26/N26S

Be sure to read this user manual carefully before using the wireless presenter and keep it for future reference.

WARNING

This product can generate laser beam. DO NOT STARE INTO BEAM OR EXPOSE USERS OF TELESCOPIC OPTICS. Do not shine the laser beam on people's or animal's eyes to avoid eye damage! Do not give this product to children as a toy!

Warning label for red laser product:

Warning label for green laser product:

This product contains AAA batteries. Do not throw this product into the fire as the battery may explode; Also, do not immerse this product in water or any other liquid, as it may explode if the battery is short circuited or damaged.

I. Features

1. Support previous page, next page. Click the page up key to go backward to previous page, long press to play slides from the current page. Click the down page key to go forward to the next page, long press to go into the black screen.
2. The function of the page turning key can be freely switched between the up and down arrows, left and right arrows, and Page Down/Up on the computer keyboard, fully supporting PowerPoint, Keynote, and Prezi.
3. Integrated design, the USB receiver can be easily stored at the rear of the wireless presenter, making it easy to carry and plug and play.
4. Supports hyperlink function. Pressing the Tab key is equivalent to the Tab key, double clicking the Tab key is equivalent to the Enter key, and holding the Tab key is equivalent to the Alt Tab key.

5. Class 2 safe laser module that complies with IEC/EN60825-1:2014.
6. Supports USB 2.0 version, use operation system universal USB driver, plug and play.
7. The page up/down keys can be customized by Norwii Presenter software. The firmware of the USB receiver is updatable.

II. Operation system

Windows 7 / 8 / 10 / 11 or later, macOS/ Linux/ Android system. It may only support page turning function on Android/ Linux system.

III. Package contents

1. Wireless presenter * 1 (USB receiver stored inside the wireless presenter)
2. User Manual * 1
3. AAA Battery * 1

IV. Specifications

Transmitter

Technology: Radio frequency

Frequency: 2.4GHz

Control Distance: 100m

Laser Power: <1mW (Class 2), see the laser label on the back of the presenter.

Laser Distance: >200m

Wavelength: Red 640-660nm

Battery capacity: AAA*1

Working Voltage: 1.5V

Dimension: 138.8*17.6*15mm

Weight: 18.6g

USB receiver

Working Voltage: 4.5-5.5V

Dimension: 24.7*13.8*5.1mm

Weight: 1.6g

V. Function map

Without Tab and Enter key

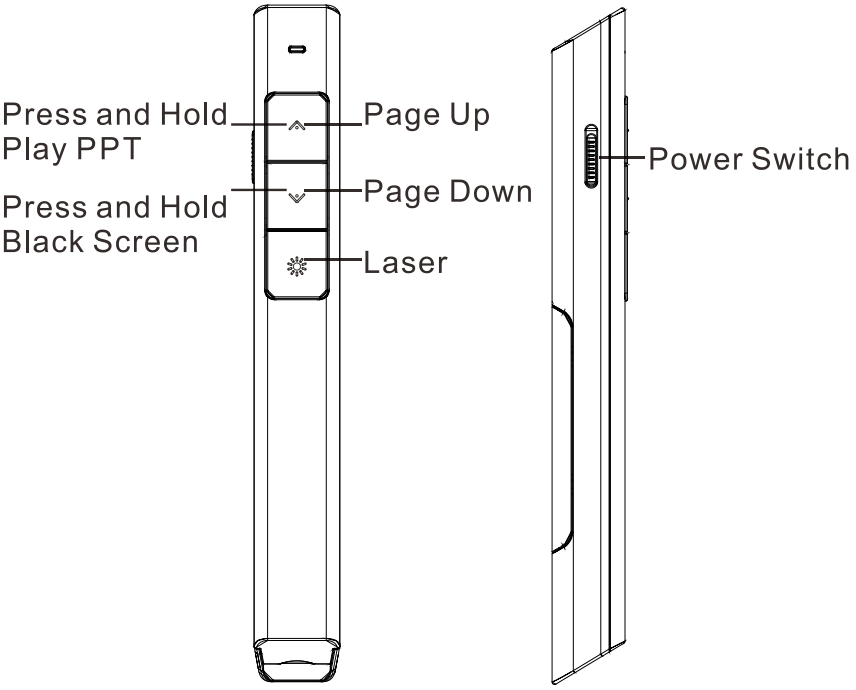

With Tab and Enter key

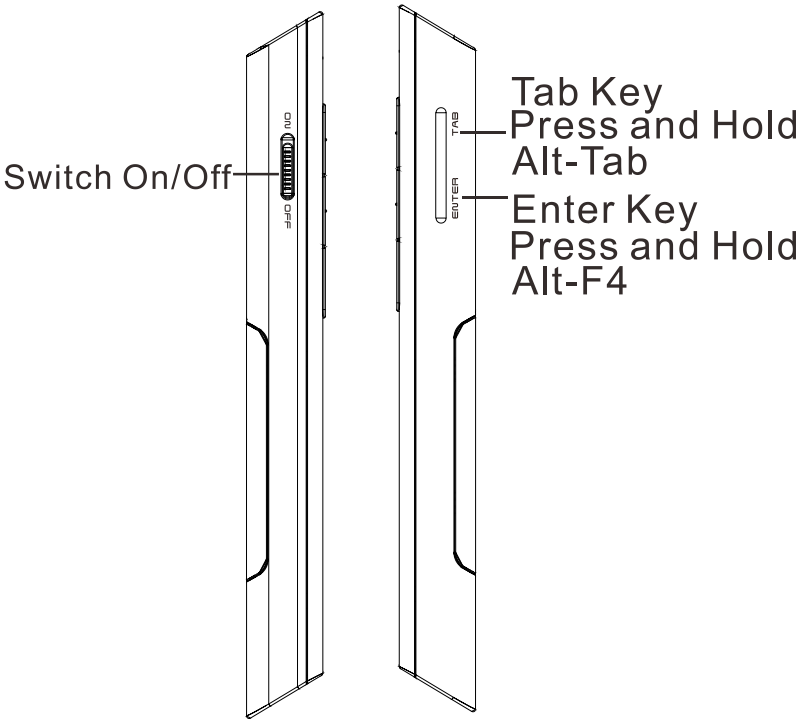

Attention: When using this product, please change your Input Method Editors (IME) to English input mode.

VI. Function Description

1. Power switch: push up to “ON” to turn on the presenter, push down to “OFF” to turn off the presenter.

2. Page up key [^]: click to page up, long press to play slides from the current page. Long press again to

end slide show.

3. Page down key ⌄: click to page down, long press to enter black screen, long press again to exit black screen.

4. Physical laser key ☀: Press and hold to turn on the physical laser beam, and release to turn off the physical laser beam.

5. Hyperlink operation: Press the "Tab" key to switch between hyperlinks on the page, and press the "Enter" key to open the hyperlink. Long press the 'Enter' key to execute Alt-F4 to close the current active window. When switching windows, press and hold the "Tab" key to execute the Alt Tab function to switch between open windows. Release the button on the window that needs to be switched to switch to the desired window.

6. The wireless presenter fully supports PowerPoint, Keynote, Prezi and other commonly used software. It supports page up and

page down keys' function switching. The page up and page down keys correspond to the function of the up and down arrows on the computer keyboard by default and it supports page up and page down for PowerPoint and Keynote. For the first time when you press the page up and page down keys simultaneously, the function will be switched to the left and right arrows on the computer keyboard, supports page up and page down for Prezi. For the second time when you press the page up and page down keys simultaneously, the function will be switched to the Page Up and Page Down on the computer keyboard, supports page up and page down for internet browser and Microsoft Photo software. For the third time when you press the page up and page down keys simultaneously, the function will be switches to the default up and down arrows on the

computer keyboard.

7. The page up/down keys can be customized by Norwii Presenter software.

VII. Installation

1. Install the battery

The product is powered by a No. 7 AAA battery. After opening the battery cover, place a No. 7 AAA battery and then close the battery cover (as shown in the picture) ：

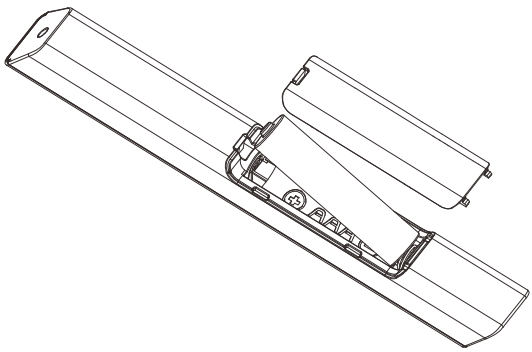

2. Take out the USB receiver and install.

Plug the receiver into the USB port. The operation systems including Windows, Android and Linux will

install the driver for the USB receiver automatically.

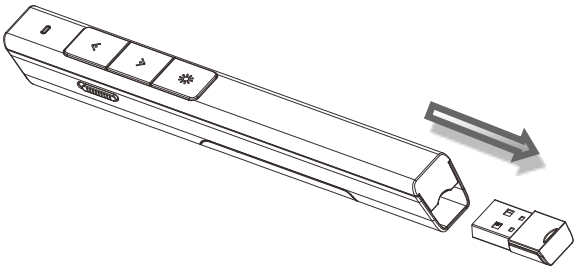

(Take out the USB receiver)

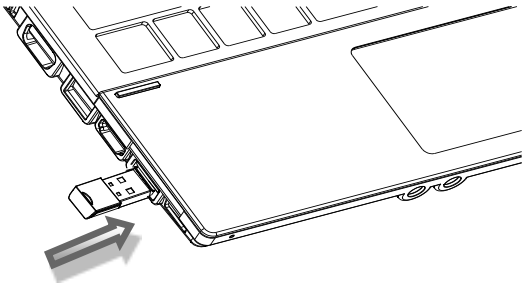

(The USB receiver into the computer USB port)

3. Control the wireless presenter by operating the key of the flip pen.
4. Turn off the wireless presenter.

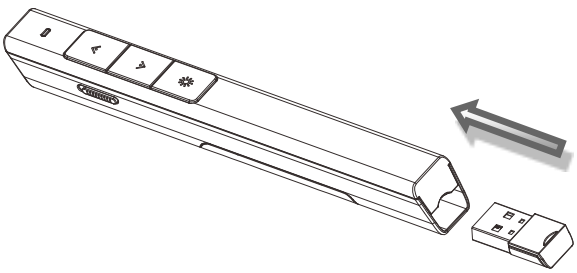

VIII. Frequently Asked Questions

1. How to download Norwii Presenter software and how to pair the presenter and the USB receiver?

For products that support key function customization or highlight serial products that support digital laser, highlight, magnifier, you need to download Norwii Presenter software. Please download it from the "Downloads" under the "Support" menu of Norwii official website www.norwii.com in English version.

2. How to know if the battery is out of power?

When the power is turned on, if the laser button is pressed and no laser is emitted, it means there is no power at all or the laser module is damaged and needs to be replaced. If other buttons are pressed and the LED indicator light does not indicate, it also indicates that the battery is out of charge. Please replace the

AAA battery in a timely manner.

When the battery level is low, the indicator light on the flip pen will enter a slow flashing state, reminding users to replace the AAA battery in a timely manner.

3. Why does the laser pointer not work?

The laser does not light up, please check:

1) Is the power switch turned on? If not, turn on the power.

2) If the LED of the wireless presenter flashes slowly, it indicates that the battery is low and needs to be replaced with AAA battery

3) If other functions of the wireless presenter are normal and only the laser is not on, it indicates that the laser module is broken and needs replacement.

4. What to do if the laser becomes dim?

The dimming of the laser beam is usually due to low battery power, and it is necessary to replace the

AAA battery as soon as possible. If the laser beam is still just a red dark spot after replacing with a new AAA battery, it indicates that the laser module is aging. When the laser module ages, please contact us for after-sales repair.

5. Why does the computer do not detect the device when the USB receiver plugs into the PC?

Please check whether the USB works or not. You can use a USB mouse or keyboard to test the USB port. If a USB mouse or keyboard works on the USB port and the USB receiver of the presenter doesn't work, it means the USB receiver is broken or the USB drivers is not compatible with the USB receiver.

You can try another USB port of the same computer or USB ports of another computer to check whether the USB receiver is good or not. If it works on other computer, it means the USB drivers of the computer are not compatible with the USB

receiver. You need to back up your data and reinstall the OS.

6. How to calibrate?

Calibration is required when you do not move the wireless presenter, but the mouse cursor keeps moving in one direction until it stops at the edge of the screen. Another situation is when moving the product horizontally or vertically, the mouse on the computer does not move horizontally or vertically, and there is an angle between the movement direction and the horizontal or vertical direction, calibration operations need to be carried out. Simply say, when you move the product horizontally, and the mouse cursor on the computer does not move horizontally, which requires calibration. The purpose of calibration is to provide a horizontal and vertical reference for the product.

Place the product on a horizontal and stable surface, press and hold

the page down key ⌄ and turn on the power. The blue LED will flash to indicate entering calibration mode. At this point, release both hands and try to keep the product level as much as possible. The blue LED flashes for 3 seconds before stopping flashing, and remains on for 5 seconds before turning off, indicating that calibration is complete.

7. The laser is ok, and the USB receiver can be detected by the computer, why does the presenter control the computer?

The reason is the USB receiver doesn't save the presenter's address properly. You can use Norwii Presenter software to let the USB receiver to save the presenter's address again. We also call this operation is to PAIR the wireless presenter and the USB receiver.

8. How to adjust the settings for Norwii Presenter on macOS?

On macOS, users need to add operation permissions of [Input Monitoring], [Screen Recording] and [Accessibility] for Norwii Presenter software under [System Preferences] - [Security & Privacy] - [Privacy]

IX. Certifications

CE, ROHS, FDA

FCCID: 2AXGRN95

Declaration of conformity

This laser product complies with IEC/EN60825-1:2014. Complies with 21 CFR 1040.10 and 1040.11, except for deviations pursuant to Laser Notice No.50, dated June 24, 2007.

X. Product Support

Shanghai Norwii Technology Co., Ltd

Address: No.277 Jinfeng Road, Pudong New Area, Shanghai, 201201, China

Tel: 86-21-51872080

Email: support@norwii.com